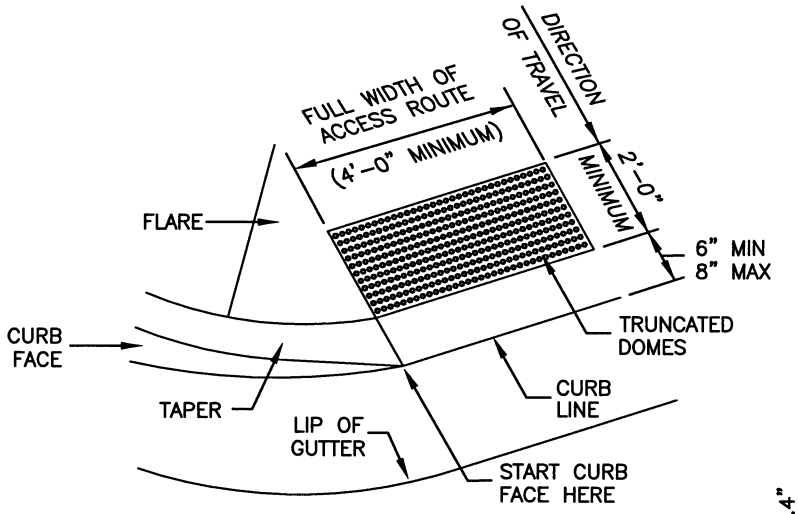

OBLIQUE

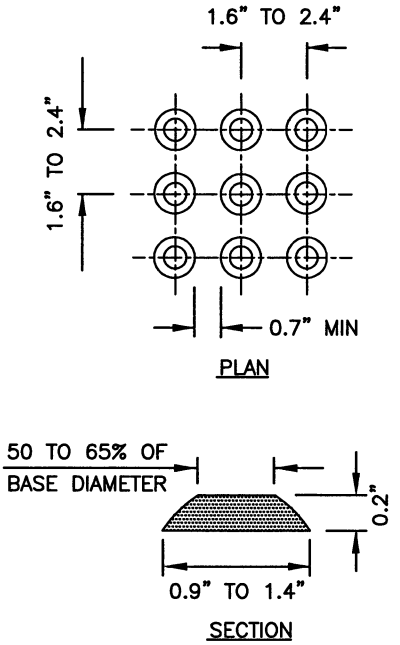

TRUNCATED DOME DETAIL

SURFACE REQUIRED FOR SIDEWALK RAMP AT CORNER

Detectable Warning Surface

Plan No. 237

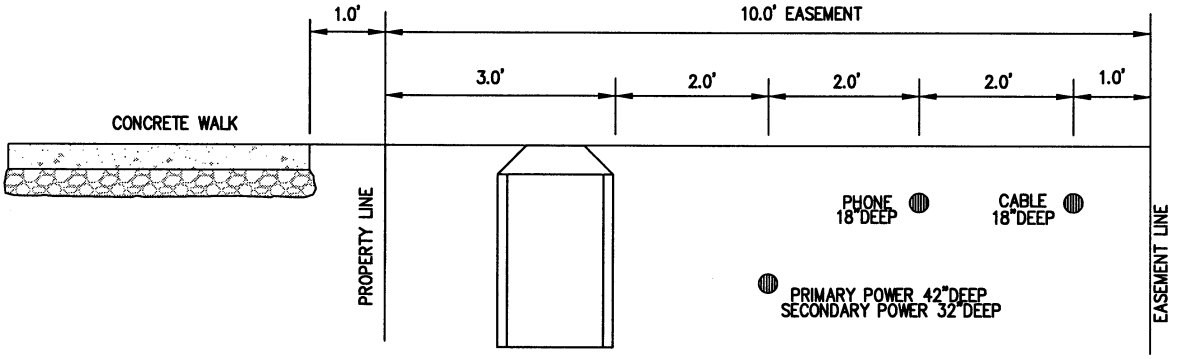

UTILITY EASEMENT SECTION

STATEMENT OF USE

THIS DOCUMENT AND ANY ILLUSTRATIONS HEREON ARE PROVIDED AS STANDARD CONSTRUCTION DETAILS WITHIN MENDON CITY. DEVIATION FROM THIS DOCUMENT REQUIRES APPROVAL OF MENDON CITY. MENDON CITY CORPORATION CAN NOT BE HELD LIABLE FOR MISUSE OR CHANGES REGARDING THIS DOCUMENT.

REVISION

NO.	DESCRIPTION	BY	APR.	DATE
△				
△				
△				
△				

J-U-B
Engineers • Surveyors • Planners

RICHMOND CITY
STANDARD PLANS

UTILITY EASEMENT SECTION

STANDARD DRAWING NUMBER: 249-N
CAD DWG: xxxxx
PLOT SCALE: N.T.S.
DATE: 10/05
DRAWN BY: JHS
DESIGN BY: JSH
CHECKED BY: ZPM
ADOPTED DATE:

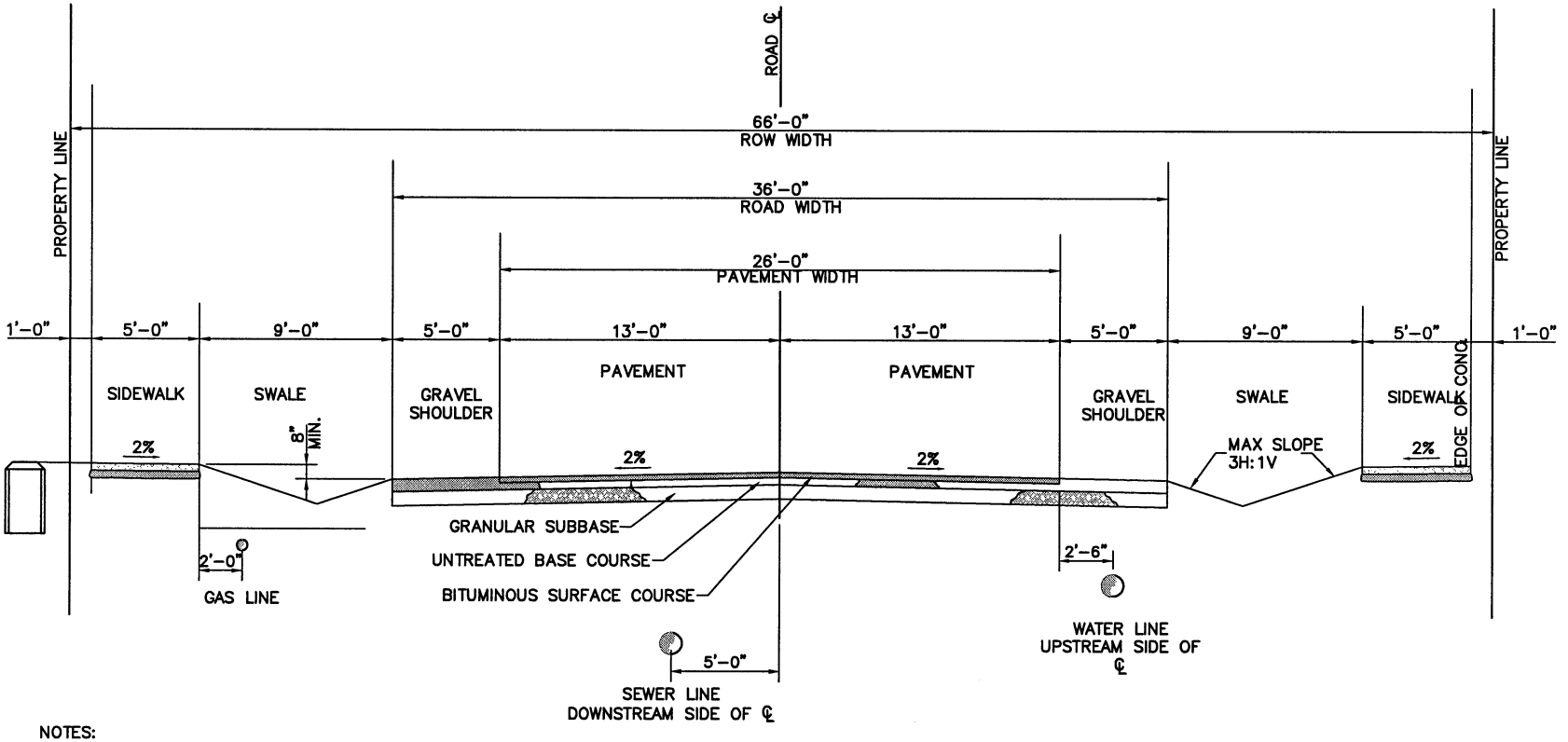

NOTES:
1. BITUMINOUS SURFACE, UNTREATED BASE COURSE, AND GRANULAR SUBBASE THICKNESSES ARE TO BE DETERMINED BY SOILS REPORT.
2. COMMERCIAL AND INDUSTRIAL STREET SECTIONS ARE DETERMINED BASED ON A TRAFFIC ANALYSIS FOR THE PARTICULAR USE.
3. THE CITY ENGINEER SHALL VERIFY PAVEMENT DESIGN PRESCRIBED BY SOILS REPORT.
4. MINIMUM THICKNESSES OF BITUMINOUS SURFACE, UNTREATED BASE COURSE AND GRANULAR SUBBASE ARE RESPECTIVELY 3, 8, AND 8 INCHES RESPECTIVELY.
5. SIDEWALKS ON BOTH SIDES OF ROAD TO BE SAME ELEVATIONS.

66 FOOT-LOCAL-SWALES

STATEMENT OF USE
THIS DOCUMENT AND ANY ILLUSTRATIONS HEREON ARE PROVIDED AS STANDARD CONSTRUCTION DETAILS WITHIN MENDON CITY. DEVIATION FROM THIS DOCUMENT REQUIRES APPROVAL OF MENDON CITY. MENDON CITY CORPORATION CAN NOT BE HELD LIABLE FOR MISUSE OR CHANGES REGARDING THIS DOCUMENT.

REVISION

NO.	DESCRIPTION	BY	APR.	DATE
1				
2				
3				
4				
5				

J-U-B
Engineers • Surveyors • Planners

RICHMOND CITY
STANDARD PLANS

ROADWAY SECTIONS
66 FOOT LOCAL-SWALES

STANDARD DRAWING NUMBER: 250-N
CAD DWG: XXXX
PLOT SCALE: N.T.S.
DATE: 10/05
DRAWN BY: JHS
DESIGN BY: JSH
CHECKED BY: ZPM
ADOPTED DATE:

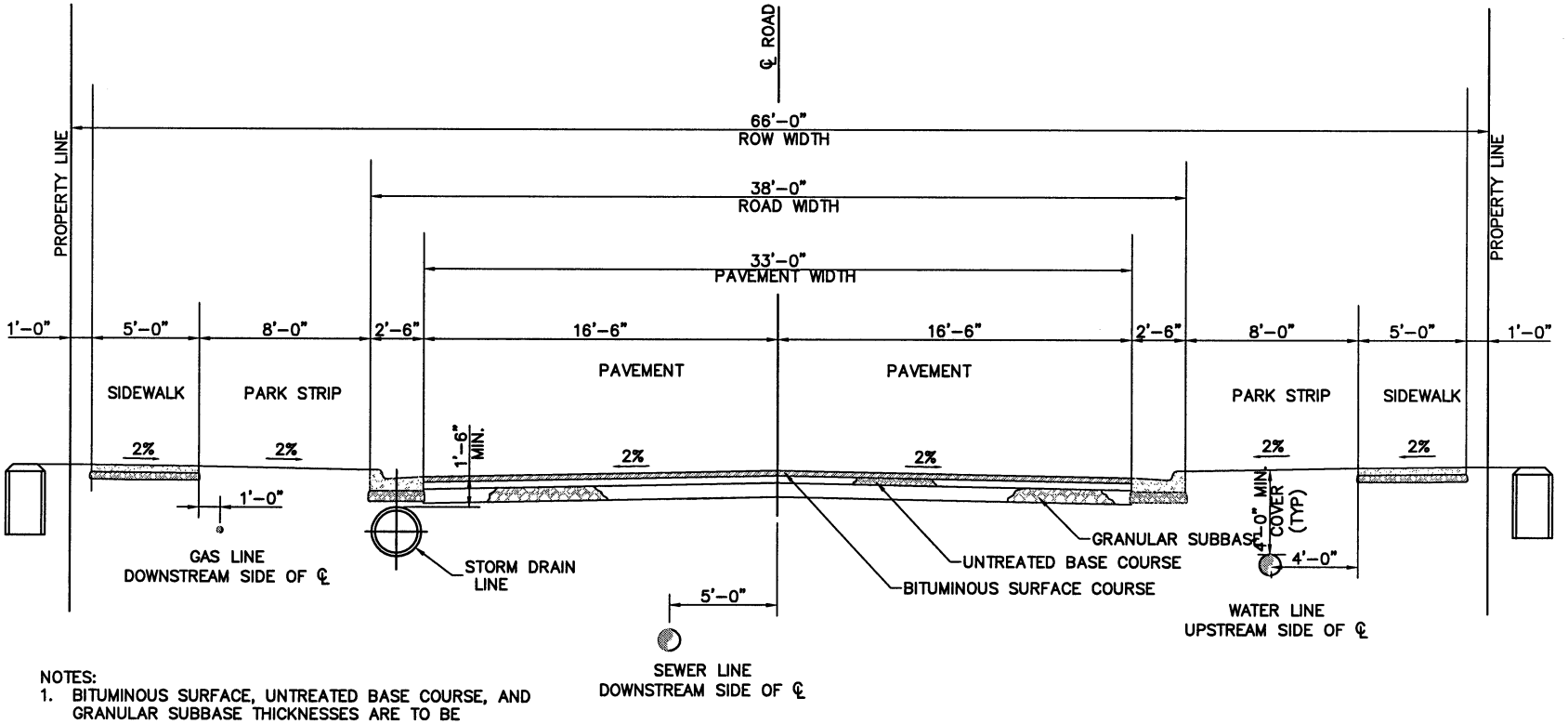

NOTES:
1. BITUMINOUS SURFACE, UNTREATED BASE COURSE, AND GRANULAR SUBBASE THICKNESSES ARE TO BE DETERMINED BY SOILS REPORT.
2. COMMERCIAL AND INDUSTRIAL STREET SECTIONS ARE DETERMINED BASED ON A TRAFFIC ANALYSIS FOR THE PARTICULAR USE.
3. THE CITY ENGINEER SHALL VERIFY PAVEMENT DESIGN PRESCRIBED BY SOILS REPORT.
4. MINIMUM THICKNESSES OF BITUMINOUS SURFACE, UNTREATED BASE COURSE AND GRANULAR SUBBASE ARE RESPECTIVELY 3, 4, AND 12 INCHES RESPECTIVELY.
5. CURBS ON BOTH SIDES OF ROAD TO BE SAME ELEVATIONS.

66 FOOT-LOCAL - CURBS

STATEMENT OF USE
THIS DOCUMENT AND ANY ILLUSTRATIONS HEREON ARE PROVIDED AS STANDARD CONSTRUCTION DETAILS WITHIN MENDON CITY. DEVIATION FROM THIS DOCUMENT REQUIRES APPROVAL OF MENDON CITY. MENDON CITY CORPORATION CAN NOT BE HELD LIABLE FOR MISUSE OR CHANGES REGARDING THIS DOCUMENT.

REVISION

NO.	DESCRIPTION	BY	APR.	DATE

J·U·B Engineers • Surveyors • Planners

RICHMOND CITY
STANDARD PLANS

ROADWAY SECTIONS
66 FOOT-LOCAL - CURBS

STANDARD DRAWING NUMBER: 250-N
CAD DWG: xxxxx
PLOT SCALE: N.T.S.
DATE: 10/31
DRAWN BY: JHS
DESIGN BY: JSH
CHECKED BY: ZPM
ADOPTED DATE:

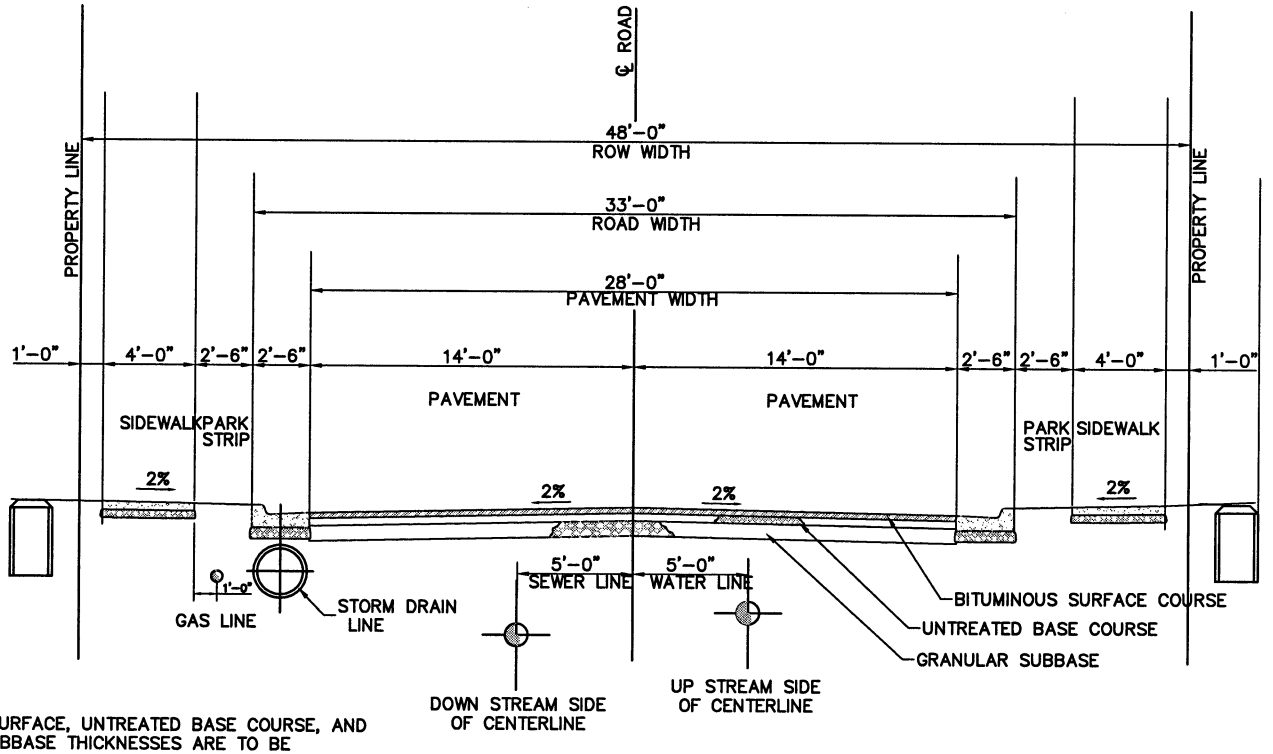

NOTES:
1. BITUMINOUS SURFACE, UNTREATED BASE COURSE, AND GRANULAR SUBBASE THICKNESSES ARE TO BE DETERMINED BY SOILS REPORT.
2. COMMERCIAL AND INDUSTRIAL STREET SECTIONS ARE DETERMINED BASED ON A TRAFFIC ANALYSIS FOR THE PARTICULAR USE.
3. THE CITY ENGINEER SHALL VERIFY PAVEMENT DESIGN PRESCRIBED BY SOILS REPORT.
4. MINIMUM THICKNESSES OF BITUMINOUS SURFACE, UNTREATED BASE COURSE AND GRANULAR SUBBASE ARE RESPECTIVELY 3, 4, AND 12 INCHES RESPECTIVELY.
5. CURBS ON BOTH SIDES OF ROAD TO BE SAME ELEVATIONS.

48 FOOT-LOCAL - CURBS

STATEMENT OF USE
THIS DOCUMENT AND ANY ILLUSTRATIONS HEREON ARE PROVIDED AS STANDARD CONSTRUCTION DETAILS WITHIN MENDON CITY. DEVIATION FROM THIS DOCUMENT REQUIRES APPROVAL OF MENDON CITY. MENDON CITY CORPORATION CAN NOT BE HELD LIABLE FOR MISUSE OR CHANGES REGARDING THIS DOCUMENT.

REVISION

NO.	DESCRIPTION	BY	APR.	DATE

J-U-B
Engineers • Surveyors • Planners

RICHMOND CITY
STANDARD PLANS

ROADWAY SECTION
48 FOOT-LOCAL - CURBS

STANDARD DRAWING NUMBER: 250-N

CAD DWG: xxxxx
PLOT SCALE: N.T.S.
DATE: 10/31
DRAWN BY: JHS
DESIGN BY: JSH
CHECKED BY: ZPM
ADOPTED DATE:

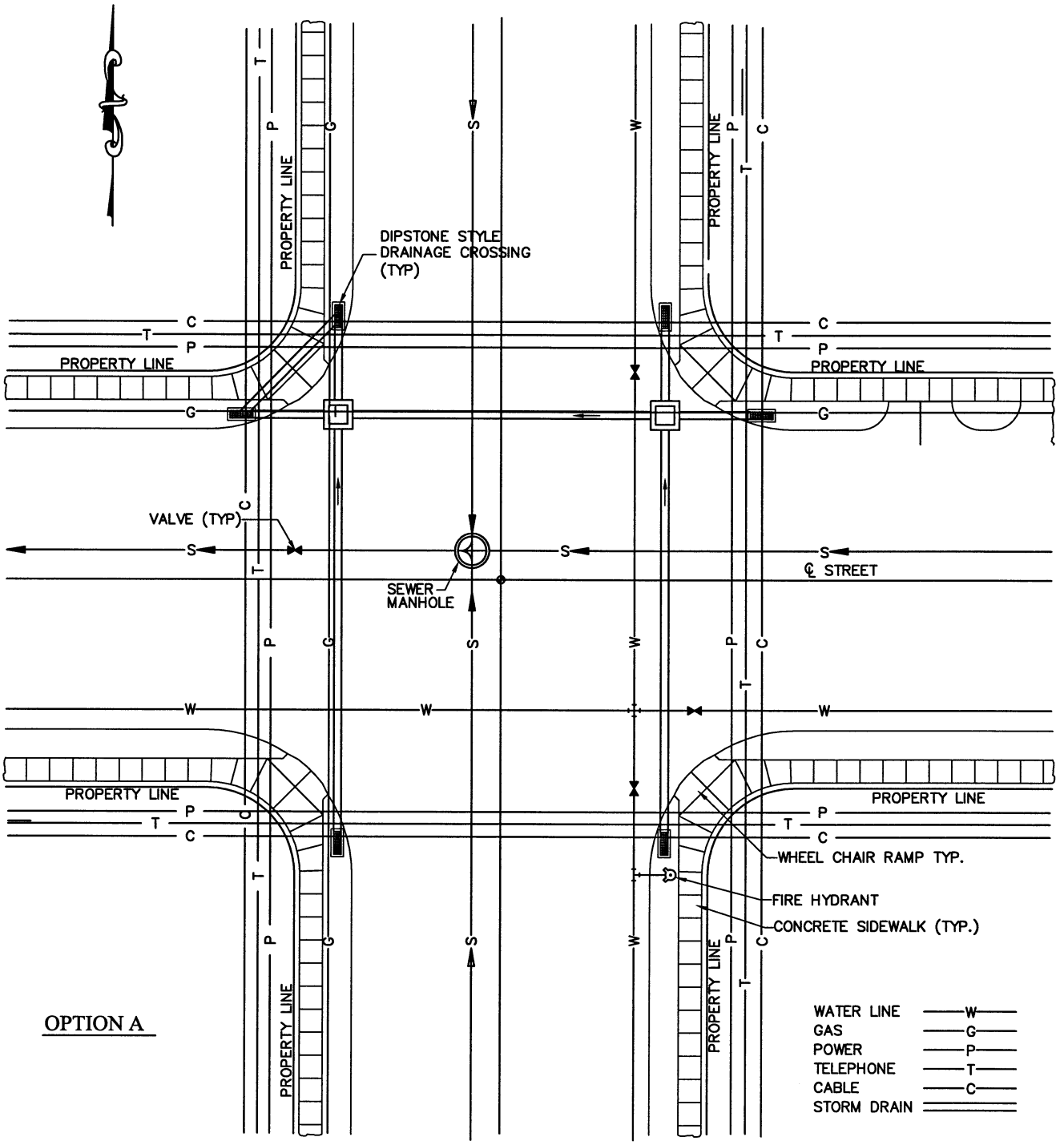

STATEMENT OF USE

THIS DOCUMENT AND ANY ILLUSTRATIONS HEREON ARE PROVIDED AS STANDARD CONSTRUCTION DETAILS WITHIN MENDON CITY. DEVIATION FROM THIS DOCUMENT REQUIRES APPROVAL OF MENDON CITY. MENDON CITY CORPORATION CAN NOT BE HELD LIABLE FOR MISUSE OR CHANGES REGARDING THIS DOCUMENT.

REVISION

NO.	DESCRIPTION	BY	APR.	DATE
△				
△				
△				
△				

J-U-B Engineers • Surveyors • Planners

RICHMOND CITY STANDARD PLANS

UTILITY LOCATIONS
SWALES - OPTION A

STANDARD DRAWING NUMBER: 251-N

CAD DWG: 298A
PLOT SCALE: N.T.S.
DATE: 10/05
DRAWN BY: JHS
DESIGN BY: JSH
CHECKED BY: ZPM
ADOPTED DATE:

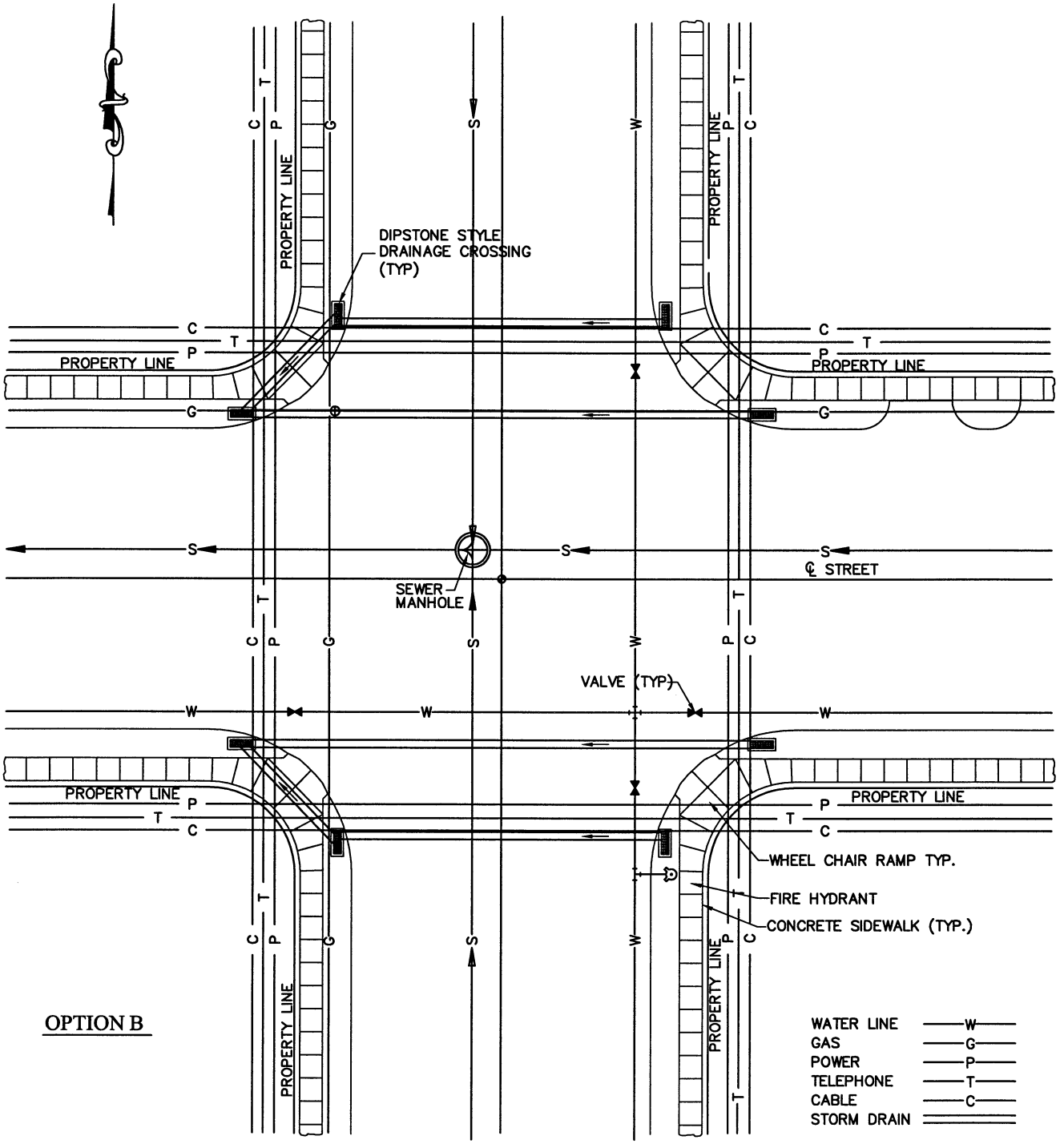

OPTION B

STATEMENT OF USE

THIS DOCUMENT AND ANY ILLUSTRATIONS HEREON ARE PROVIDED AS STANDARD CONSTRUCTION DETAILS WITHIN MENDON CITY. DEVIATION FROM THIS DOCUMENT REQUIRES APPROVAL OF MENDON CITY. MENDON CITY CORPORATION CAN NOT BE HELD LIABLE FOR MISUSE OR CHANGES REGARDING THIS DOCUMENT.

REVISION

NO.	DESCRIPTION	BY	APR.	DATE

J-U-B Engineers • Surveyors • Planners

RICHMOND CITY STANDARD PLANS

UTILITY LOCATIONS
SWALES - OPTION B

STANDARD DRAWING NUMBER:	251-N
CAD DWG:	xxxxx
PLOT SCALE:	X = X
DATE:	10/05
DRAWN BY:	JHS
DESIGN BY:	JSH
CHECKED BY:	ZPM
ADOPTED DATE:	-

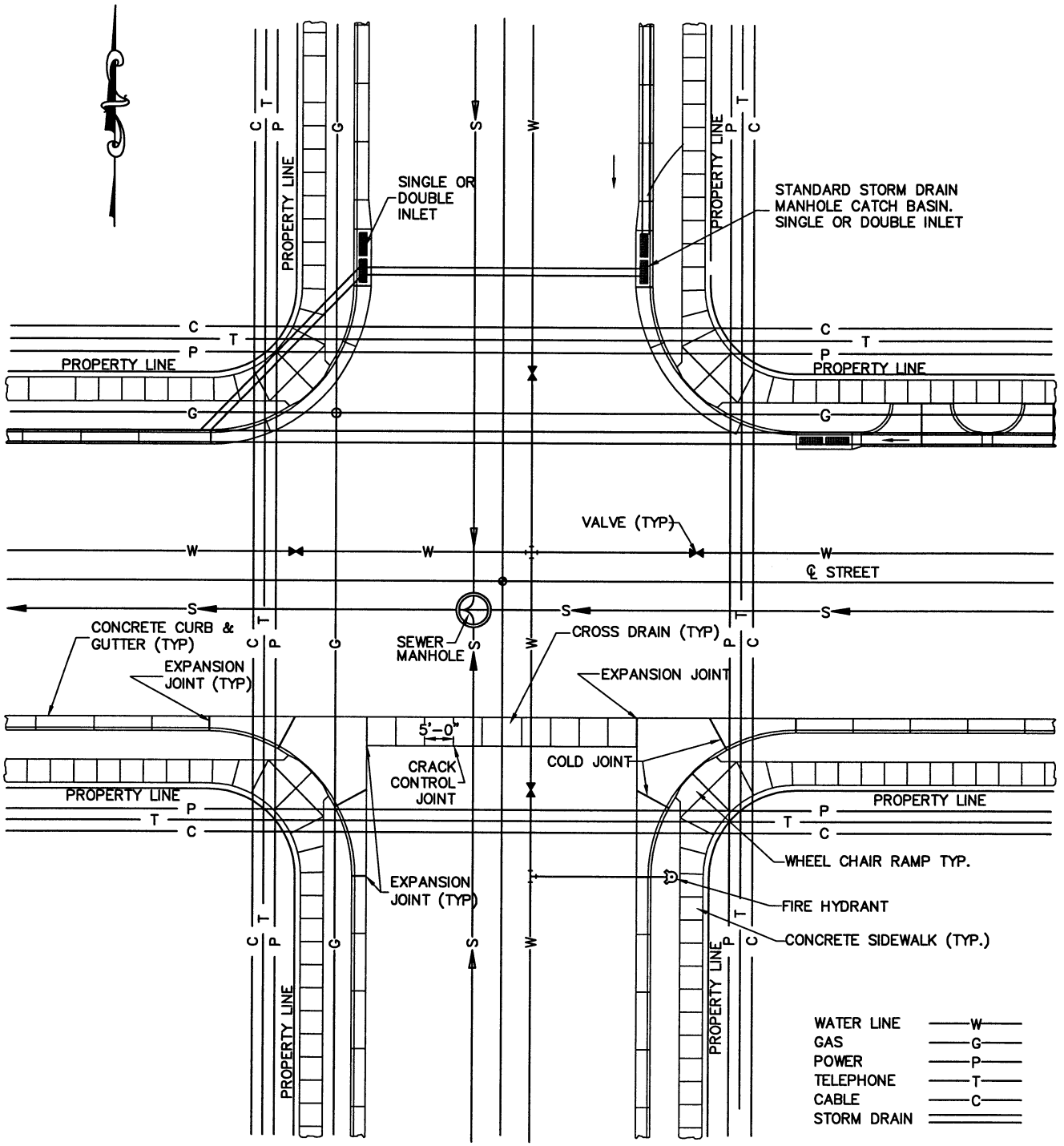

STATEMENT OF USE
THIS DOCUMENT AND ANY ILLUSTRATIONS HEREON ARE PROVIDED AS STANDARD CONSTRUCTION DETAILS WITHIN MENDON CITY. DEVIATION FROM THIS DOCUMENT REQUIRES APPROVAL OF MENDON CITY. MENDON CITY CORPORATION CAN NOT BE HELD LIABLE FOR MISUSE OR CHANGES REGARDING THIS DOCUMENT.

REVISION

NO.	DESCRIPTION	BY	APR.	DATE
△				
△				
△				
△				

J-U-B
Engineers • Surveyors • Planners

RICHMOND CITY STANDARD PLANS

UTILITY LOCATIONS CURBS

STANDARD DRAWING NUMBER: 251-N
CAD DWG: xxxxx
PLOT SCALE: X = X
DATE: 10/05
DRAWN BY: JHS
DESIGN BY: JSH
CHECKED BY: ZPM
ADOPTED DATE:

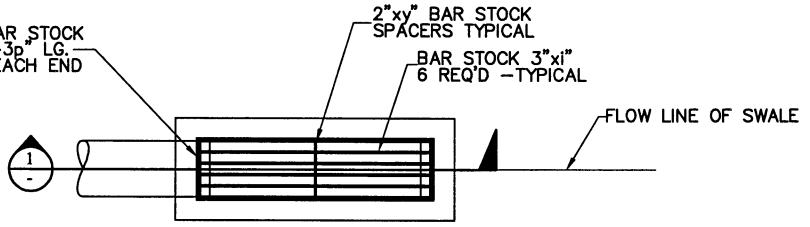

PLAN

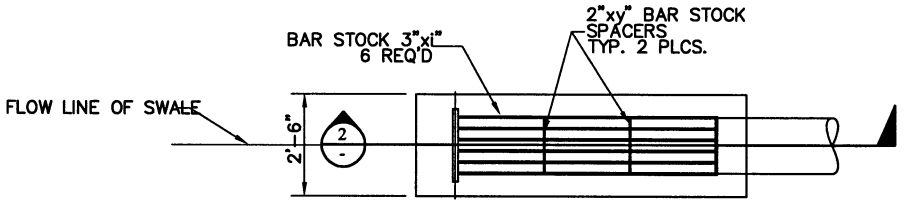

PLAN

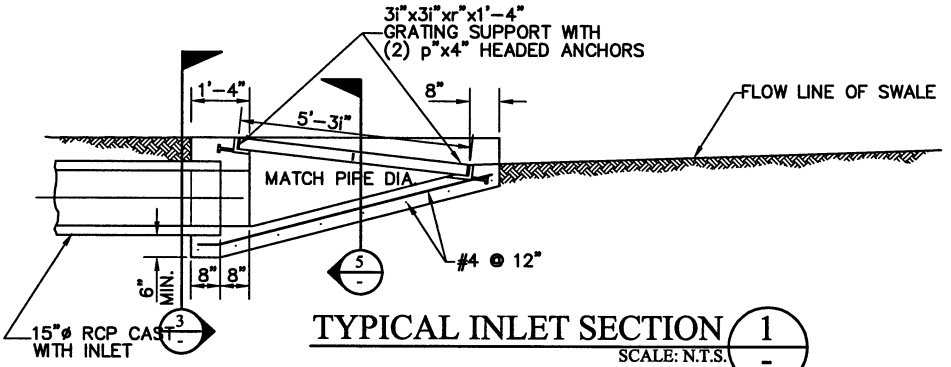

TYPICAL INLET SECTION 1 / -
SCALE: N.T.S.

NOTE:
HOT DIP GALVANIZE GRATES AND GRATING SUPPORTS AFTER FABRICATION.

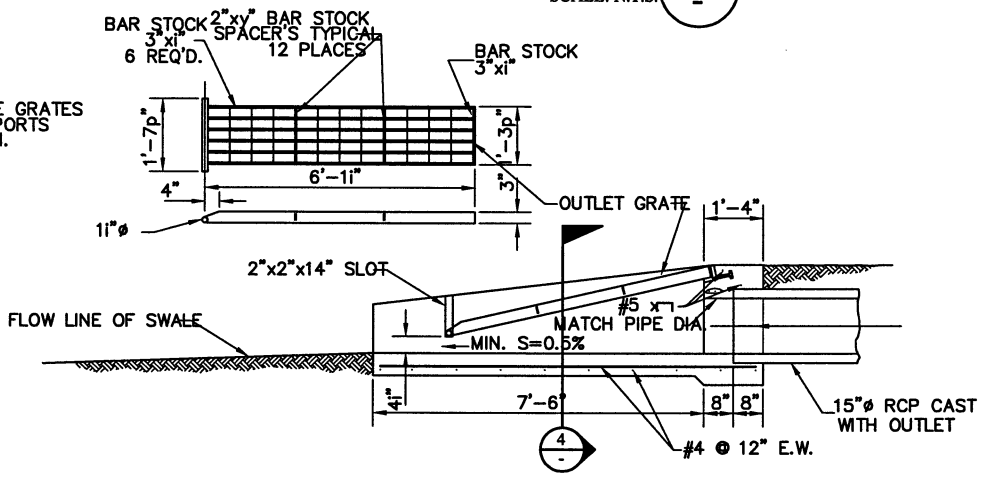

TYPICAL OUTLET SECTION 2 / -
SCALE: N.T.S.

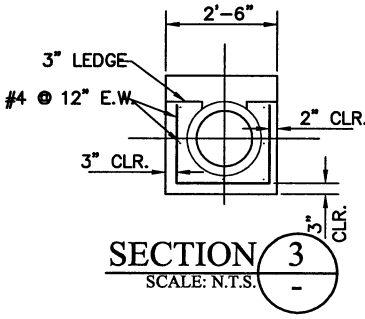

SECTION 3 / -
SCALE: N.T.S.

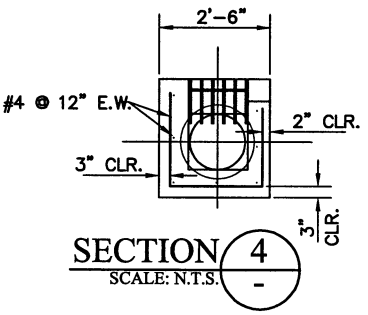

SECTION 4 / -
SCALE: N.T.S.

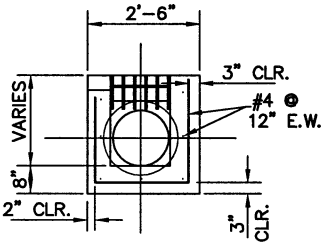

SECTION 5 / -
SCALE: N.T.S.

STATEMENT OF USE

THIS DOCUMENT AND ANY ILLUSTRATIONS HEREON ARE PROVIDED AS STANDARD CONSTRUCTION DETAILS WITHIN MENDON CITY. DEVIATION FROM THIS DOCUMENT REQUIRES APPROVAL OF MENDON CITY. MENDON CITY CORPORATION CAN NOT BE HELD LIABLE FOR MISUSE OR CHANGES REGARDING THIS DOCUMENT.

REVISION

NO.	DESCRIPTION	BY	APR.	DATE
△				
△				
△				
△				

J-U-B
Engineers • Surveyors • Planners

RICHMOND CITY STANDARD PLANS

DIPSTONE INLET

STANDARD DRAWING NUMBER: 325-N

CAD DWG: xxxxx
PLOT SCALE: X = X
DATE: 10/05
DRAWN BY: JHS
DESIGN BY: JSH
CHECKED BY: ZPM
ADOPTED DATE:

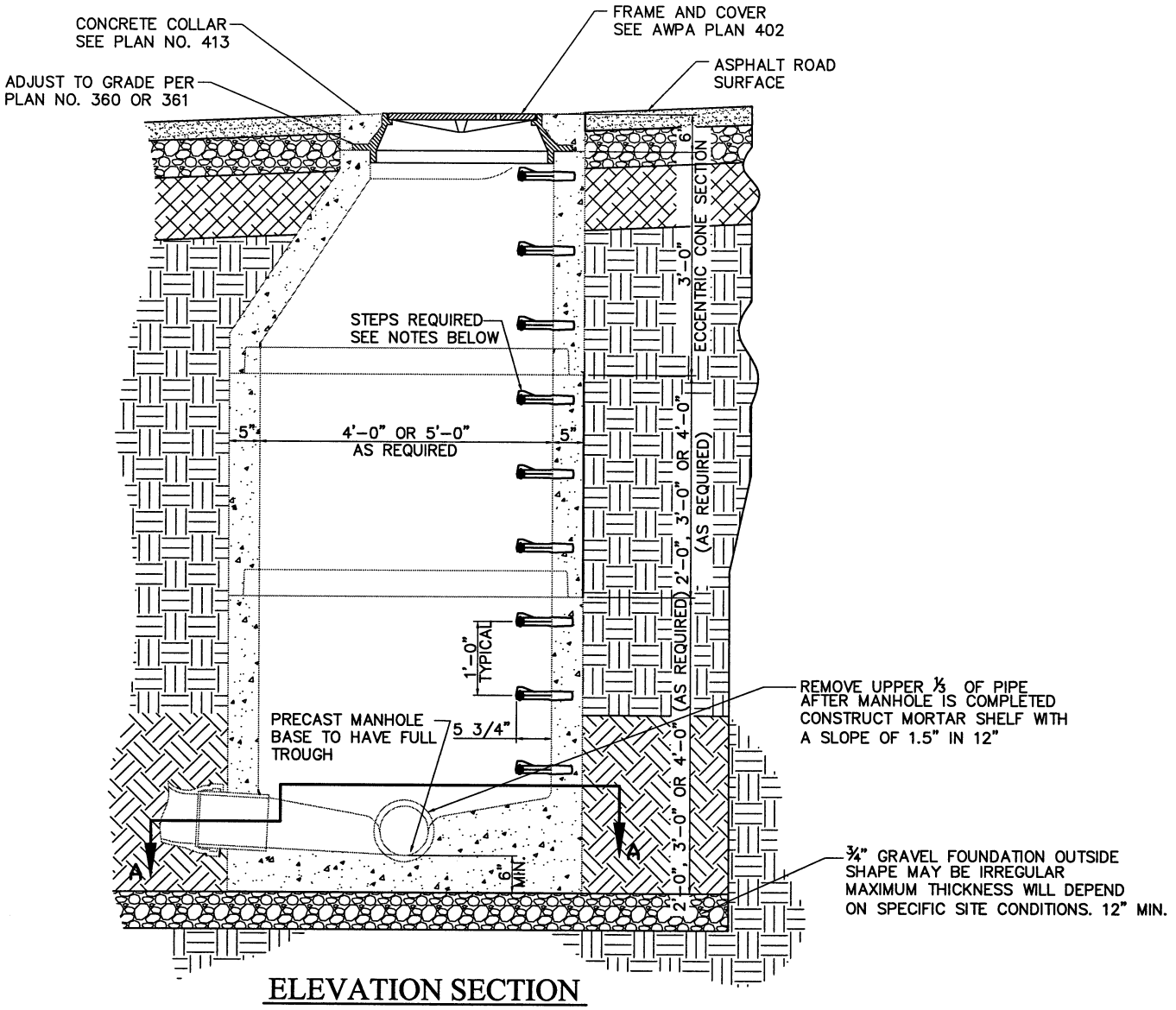

ELEVATION SECTION

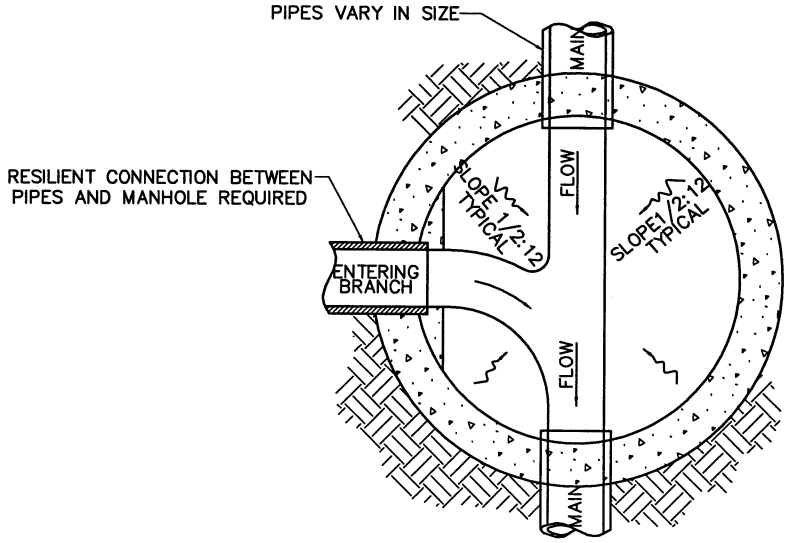

SECTION A-A

NOTES:

1. STEPS SHALL BE MADE OF COPOLYMER POLYPROPYLENE CONFORMING TO ASTM D-4101. REINFORCING STEEL TO BE DEFORMED ½" DIAMETER GRADE 60 ROD.
2. FLAT LIDS MAY BE USED IN LIEU OF ECENTREC CONES WHERE NECESSARY. FLAT LIDS SHALL BE OF ECCENTRIC DESIGN AND MEET H520 LIVE LOADING. NO FLAT RING AND COVERES WILL BE ALLOWED UNLESS APPROVED BY PUBLIC WORKS.
3. USE FERNCO COUPLING TO TRANSITION TO CONCRETE OR PVC PIPE AS APPROPRIATE.

NOTE: DRAWING REPLACES PLAN 411 OF APWA MANUAL OF STANDARD PLANS, 2002 EDITION

STATEMENT OF USE
THIS DOCUMENT AND ANY ILLUSTRATIONS HEREON ARE PROVIDED AS STANDARD CONSTRUCTION DETAILS WITHIN MENDON CITY. DEVIATION FROM THIS DOCUMENT REQUIRES APPROVAL OF MENDON CITY. MENDON CITY CORPORATION CAN NOT BE HELD LIABLE FOR MISUSE OR CHANGES REGARDING THIS DOCUMENT.

REVISION

NO.	DESCRIPTION	BY	APR.	DATE
△				
△				
△				
△				

J-U-B
Engineers • Surveyors • Planners

RICHMOND CITY STANDARD PLANS

SANITARY SEWER MANHOLE

STANDARD DRAWING NUMBER:	411-R
CAD DWG:	511-R
PLOT SCALE:	NTS
DATE:	OCT 05
DRAWN BY:	JDM
DESIGN BY:	ZPM
CHECKED BY:	ZPM
ADOPTED DATE:	

NOTE:
3" MAGNETIC LOCATOR TAPE TO BE INSTALLED WITH ALL WATER MAINS AT 24" ABOVE THE TOP OF THE PIPE.

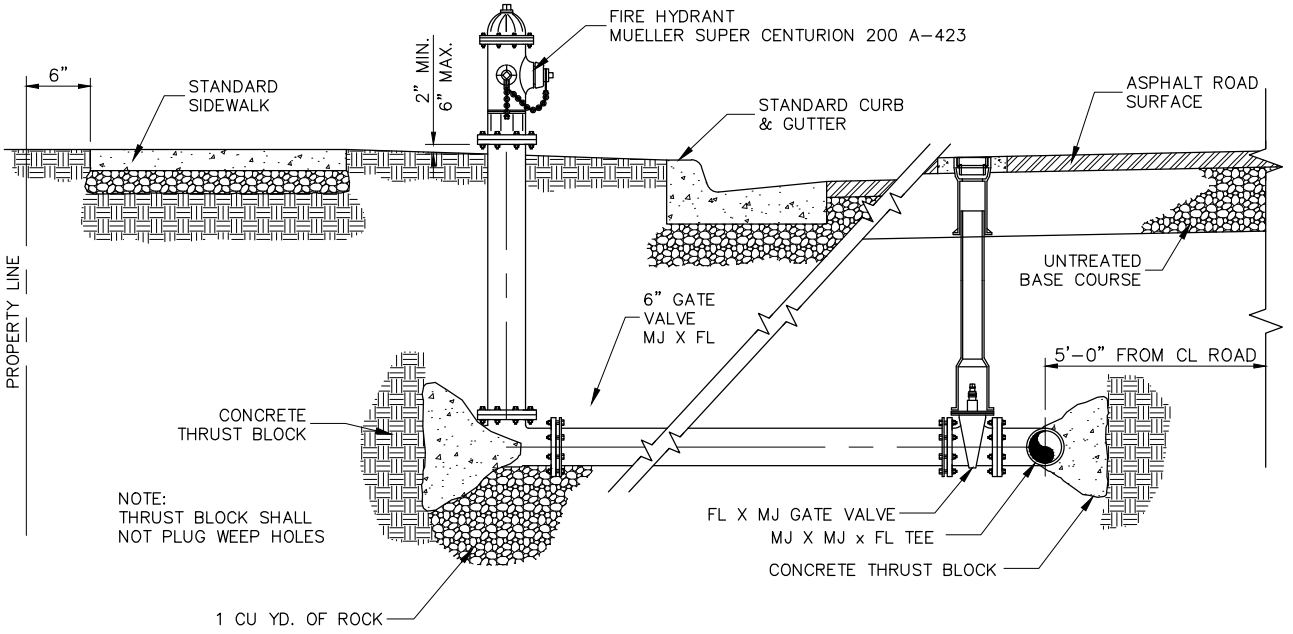

FIRE HYDRANT WITH VALVE

SCALE: NTS

NOTE: DRAWING REPLACES 511 OF APWA MANUAL OF STANDARD PLANS, 2012 EDITION

REUSE OF DRAWINGS
THIS DOCUMENT, AND THE IDEAS AND DESIGNS INCORPORATED HEREIN, AS AN INSTRUMENT OF PROFESSIONAL SERVICE, IS THE PROPERTY OF **J-U-B ENGINEERS, Inc.** AND IS NOT TO BE USED, IN WHOLE OR PART, FOR ANY OTHER PROJECT WITHOUT THE EXPRESS WRITTEN AUTHORIZATION OF **J-U-B ENGINEERS, Inc.**

NO.	REVISION DESCRIPTION	BY	APR.	DATE

FILE:
JUB PROJ. #: -
DRAWN BY: MS
DESIGN BY: DK
CHECKED BY: DK
LAST UPDATED: 5/3/2013

J-U-B ENGINEERS, INC.

RICHMOND CITY
STANDARD PLANS

FIRE HYDRANT WITH VALVE

SHEET
511-R

Plot Date:5/3/2013 11:37 AM Plotted By: Marcus Simons
Date Created: 1/9/2013 \\LOGAN\PUBLIC\PROJECTS\JUB\RICHMOND\STANDARDS CONSTRUCTION\MANUAL OF DESIGN & CONSTRUCTION STANDARDS\2013 VERSION\DRAWINGS\511-R_FIREHYDRANTWITHVALVE.DWG

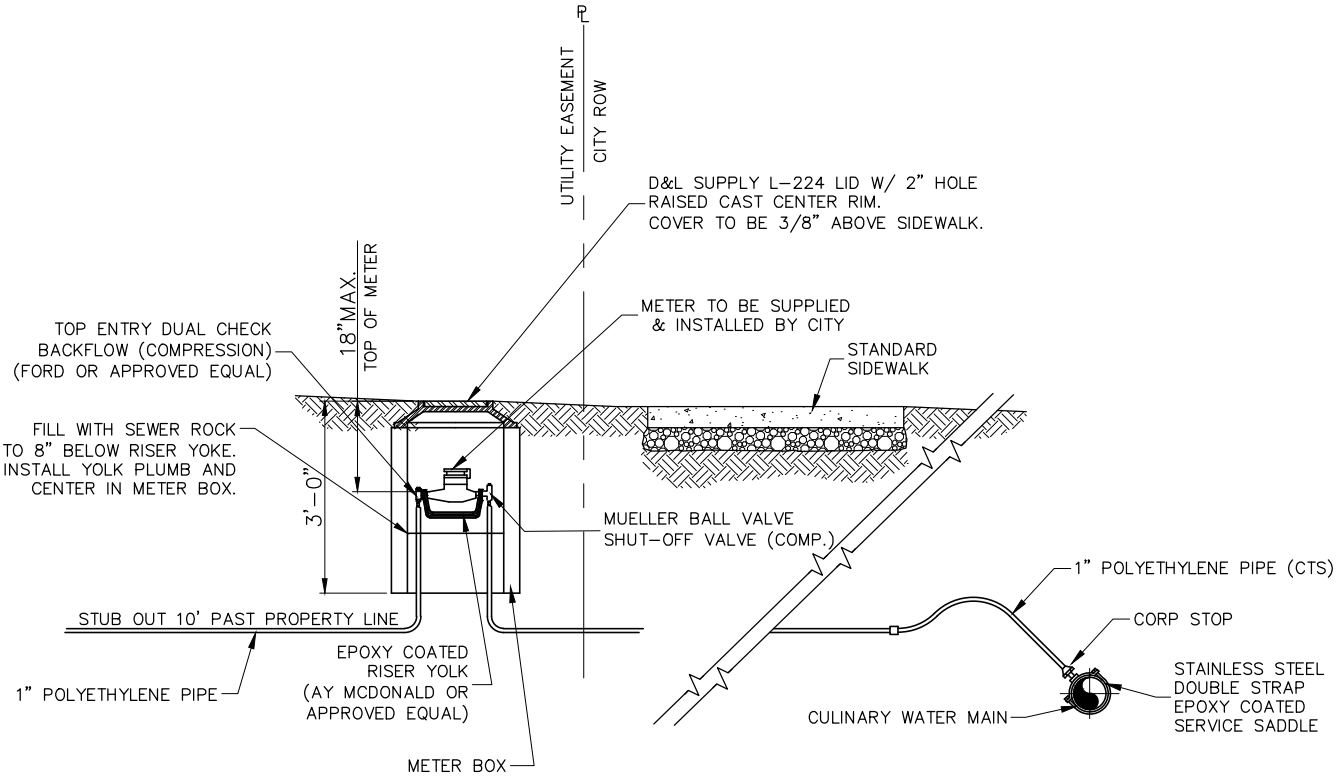

RICHMOND CITY WATER SERVICE INFORMATION					
SERVICE SIZE	METER BOX SIZE	TYPE OF MATERIAL FOR METER BOX	WATER METER	CONNECTION TYPE	BYPASS
3/4"	18" DIA.	POLYETHYLENE	BY CITY	COMPRESSION	NO
1"	24" DIA.	POLYETHYLENE	BY CITY	COMPRESSION	NO
1 1/2"	48" DIA.	CONCRETE	BY CITY	FLANGE	YES
2"	48" DIA.	CONCRETE	BY CITY	FLANGE	YES
3"	60" DIA.	CONCRETE	BY CITY	FLANGE	YES
4"	4'X6' BOX	CONCRETE	BY CITY	FLANGE	YES

TYPICAL WATER CONNECTION

SCALE: NTS

NOTE: DRAWING REPLACES PLAN 521 OF APWA MANUAL OF STANDARD PLANS, 2012 EDITION

REUSE OF DRAWINGS
THIS DOCUMENT, AND THE IDEAS AND DESIGNS INCORPORATED HEREIN, AS AN INSTRUMENT OF PROFESSIONAL SERVICE, IS THE PROPERTY OF **J-U-B ENGINEERS, Inc.** AND IS NOT TO BE USED, IN WHOLE OR PART, FOR ANY OTHER PROJECT WITHOUT THE EXPRESS WRITTEN AUTHORIZATION OF **J-U-B ENGINEERS, Inc.**

NO.	REVISION DESCRIPTION	BY	APR.	DATE

FILE:
JUB PROJ. #: -
DRAWN BY: MS
DESIGN BY: DK
CHECKED BY: DK
LAST UPDATED: 5/3/2013

J-U-B ENGINEERS, INC.

RICHMOND CITY
STANDARD PLANS

3/4" AND 1" METER

SHEET
521-R

Plot Date: 5/3/2013 11:38 AM Plotted By: Marcus Simons
Date Created: 1/9/2013 \\LOGAN\PUBLIC\PROJECTS\JUB\RICHMOND\STANDARDS CONSTRUCTION\MANUAL OF DESIGN & CONSTRUCTION STANDARDS\2013 VERSION\DRAWINGS\521-R_METER.DWG